MECHANICAL DRAWING & ASSEMBLY GUIDE

PiEEG Pi 5 Enclosure

3D-printed PLA case for Raspberry Pi 5 with PiEEG-8 or PiEEG-16

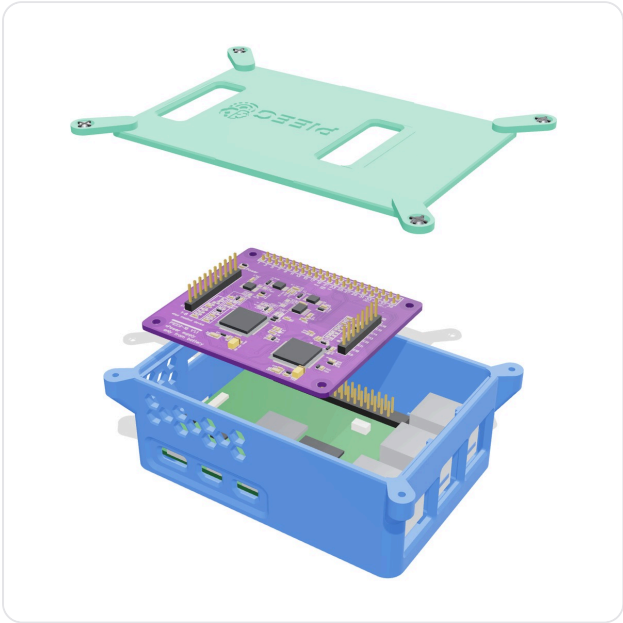

Parts List

#	PART	QTY	MATERIAL	SIZE (MM) / STD.
A	Case body	1	PLA	105.8 × 75.2 × 35.5
B	Lid with screw ears	1	PLA	105.8 × 75.2 × 3.6
C	Countersunk screw M2.5 × 8	4	Steel	ISO 7046 / DIN 965

Fastening

Use **4 × M2.5 × 8 mm countersunk (90° flat head) Phillips screws**, ISO 7046 / DIN 965, or self-tapping screws for plastic of the same size. 8 mm leaves about 6 mm of thread in the lug. **Do not use 10 mm or longer**: the screw would reach the bottom of the 8 mm pilot hole and can crack the lug. Optional: 4 × M2.5 × 8 mm pan-head screws with M2.5 nuts fix the Pi to the floor from below; the lid already holds it in place, so this is not required.

Tightening: Hand-tight only (about 0.2 N·m). Over-tightening strips the thread in PLA.

Hole & Fixing Details (measured from STL)

FEATURE	SIZE	PURPOSE
Lid ear, through-hole	Ø 2.8 mm	Clearance for M2.5
Lid ear, countersink	Ø 5.1 mm, 90°	M2.5 flat head (Ø 4.7 mm) sits flush
Lid ear thickness	≈ 1.9 mm	
Corner lug, pilot hole	Ø 2.1 mm × 8 mm deep	Screw forms its own thread in PLA
Pi floor holes (optional)	Ø 2.95 mm, recess underneath	For fixing the Pi from below

Dimensional Drawings

Orthographic views generated from the released STL files. Overall dimensions in millimetres; tolerance ± 0.3 mm (FDM print).

Case body · all dimensions in mm

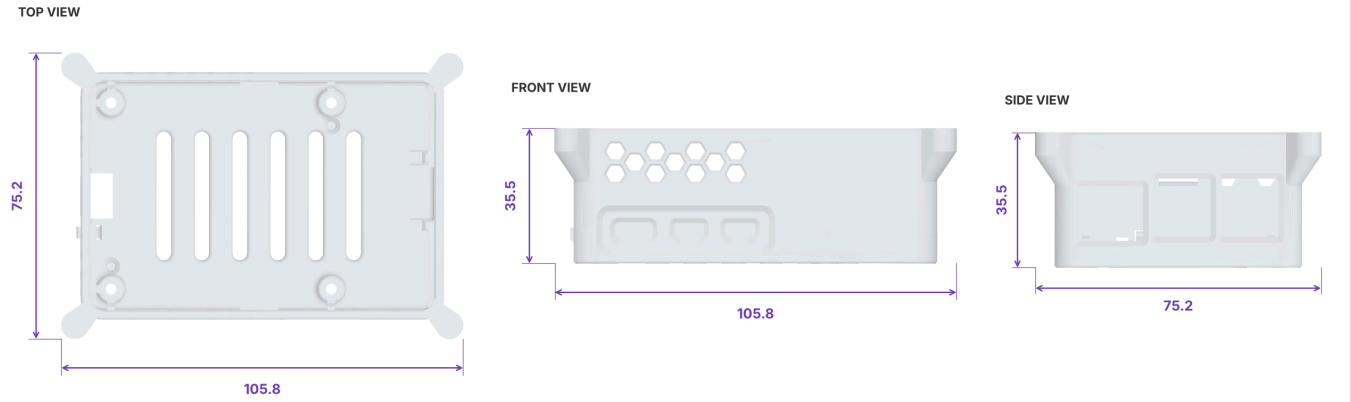

Part A — Case body

Lid · all dimensions in mm

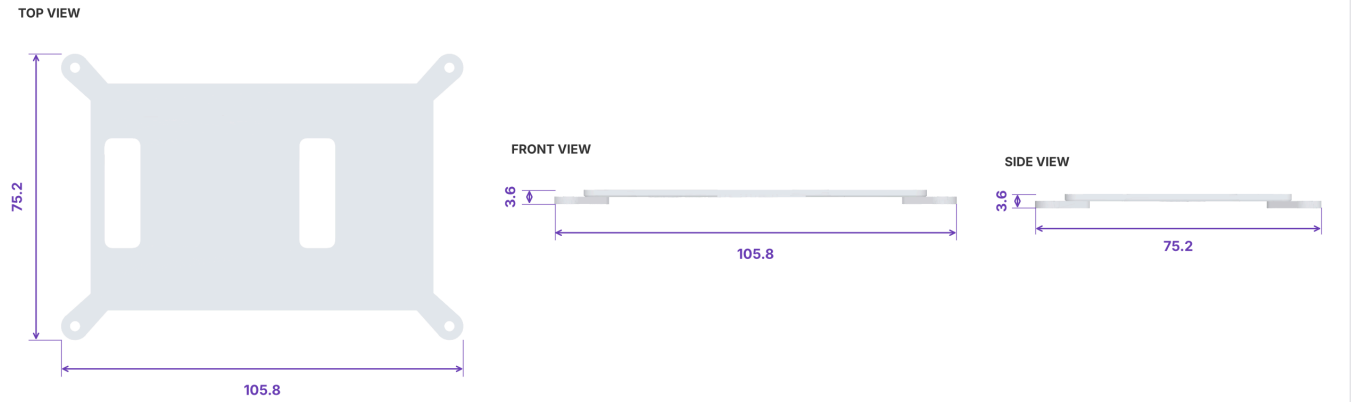

Part B — Lid

Assembly

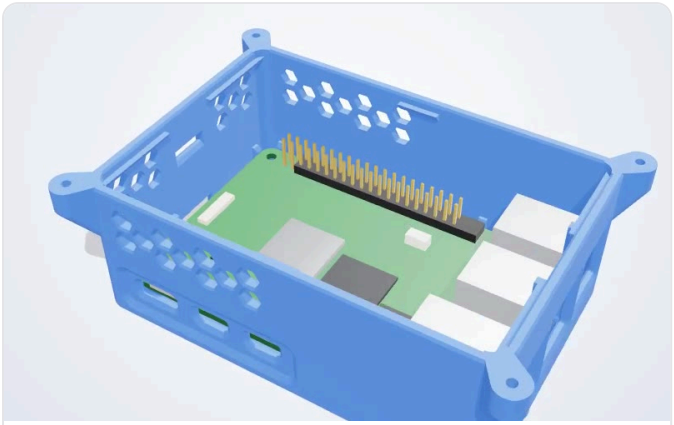

1 Place the Raspberry Pi 5 on the four posts in the case.

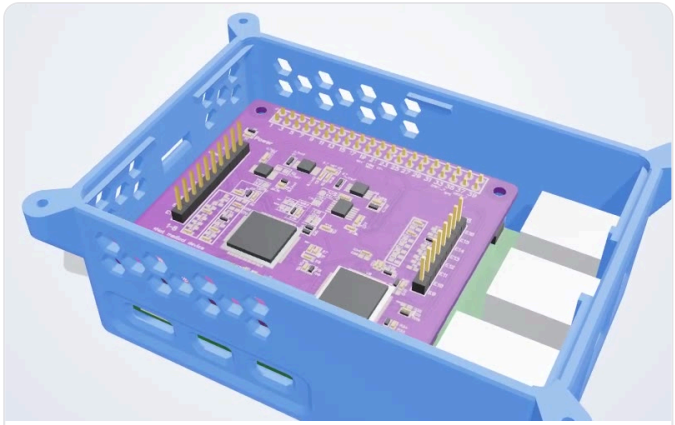

2 Plug the PiEEG-8 or PiEEG-16 onto the Pi's 40-pin GPIO header.

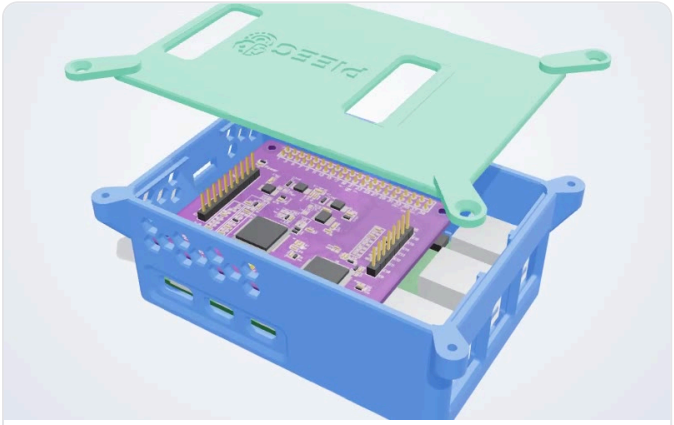

3 Put the lid on: the left slot sits over electrodes 1–8, the right slot over electrodes 9–16 (PiEEG-16) or the jumpers (PiEEG-8).



4 Insert and tighten the 4 lid screws at the corners. Stop as soon as the head sits flush.

Before you start. Fit the shield only with the Raspberry Pi unpowered. The same steps work for PiEEG-8 and PiEEG-16.

3D Printing (DIY)

The STL files are open source. Typical starting settings:

Layer height	0.2 mm
Infill	15–20 %
Walls	3 perimeters
Supports	Little or none
Orientation	Case bottom-side down; lid flat
Material	PLA, 1.75 mm

Material & Care

PLA is stiff, non-conductive and fine at room and body temperature. It softens at around 55–60 °C, so don't leave the case in a hot car, on a heater or in direct summer sun. Clean with a dry or slightly damp cloth; avoid acetone and strong solvents.

Troubleshooting & FAQ

Does the same case fit PiEEG-8 and PiEEG-16?	Yes. Both shields have the same outline and mounting holes and plug onto the same 40-pin header.
Will it fit a Raspberry Pi 4?	No. The Pi 4 has USB and Ethernet in different places, so the side openings won't line up.
Screw spins without tightening	The thread in the lug is stripped. Use a slightly longer self-tapping screw (max 9 mm) or reprint the case.

Safety note. PiEEG is an open-source research and education device, not a medical device. The case is a mechanical cover only and adds no electrical isolation. Always power the Raspberry Pi from an isolated 5 V battery power bank, with every connected device on battery.

Related Documents

- **PIEEG-ENC-DS-001** — Product Datasheet
- PiEEG-8 & PiEEG-16 datasheet, pinout and quick-start guide (pieeg.com/docs)

Revision History

REV.	DATE	CHANGE
A	November 2026	First release