EasyEXG PCB Technical Information

2	1.6 mm	46 × 26	36	0603
Copper layers	FR-4 thickness	mm outline	Placed parts, top only	Passive size

01 BOARD VIEWS (FROM GERBERS)

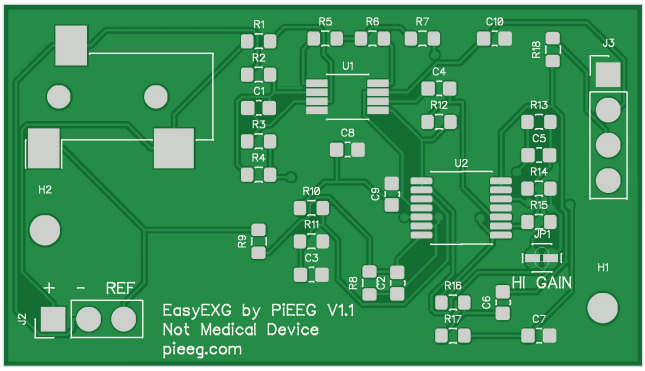

Top: copper, mask and silkscreen

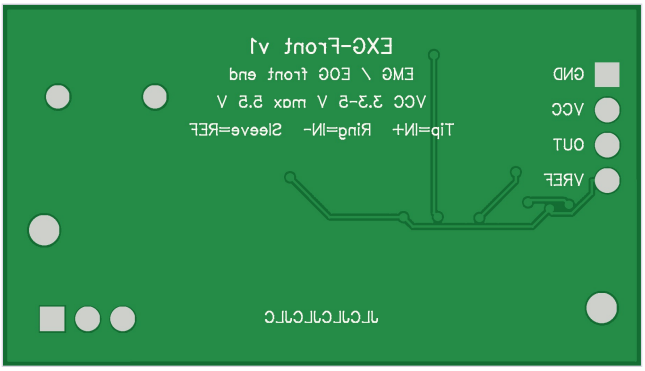

Bottom, viewed from below: pinout silkscreen

02 STACK-UP AND FABRICATION

Layers	2 copper layers: F.Cu (signals, analog ground pour) and B.Cu (ground pour, routing)
Material	FR-4, 1.6 mm finished thickness
Solder mask / silk	Green mask both sides, white silkscreen both sides (pinout printed on the bottom)
Outline	46.0 × 26.0 mm rounded rectangle, R 1.5 mm corners
Assembly	All SMT parts on the top side (factory SMT); J2 and J3 headers hand-soldered through-hole
Gerber set	1 - F.Cu, 2 - B.Cu, TopMask, BottomMask, TopSilk, BottomSilk, TopPaste, BoardOutline, Through.drl

03 DRILL TABLE

Tool	Diameter	Qty	Plating	Used for
T1	Ø 1.0 mm	7	Plated	J2 (3) and J3 (4) header pins, 2.54 mm pitch
T2	Ø 1.7 mm	2	Non-plated	J1 jack locating pegs at (4.0, 6.6) and (11.0, 6.6)
T3	Ø 2.2 mm	2	Non-plated	H1, H2 M2 mounting holes at (43.2, 21.8) and (3.0, 16.2)
—	vias	—	Plated	Top-to-bottom ground and signal stitching (see Through.drl)

04 BILL OF MATERIALS

Designators	Qty	Value	Description	Manufacturer · MPN
C1, C2, C5	3	1 nF	C0G 50 V 5 % 0603	Murata GRM1885C1H102JA01D
C3, C10	2	10 µF	X5R 10 V 10 % 0603	Murata GRM188R61A106KE69D
C4	1	1 µF	X7R 25 V 10 % 0603	Murata GRM188R71E105KA12D
C6	1	47 nF	X7R 50 V 5 % 0603	Murata GRM188R71H473JA61D
C7	1	22 nF	X7R 50 V 10 % 0603	Murata GRM188R71H223KA01D
C8, C9	2	100 nF	X7R 50 V 10 % 0603	Murata GRM188R71H104KA93D
R1, R2, R16, R17	4	10 kΩ	1 % 0.1 W 0603	Yageo RC0603FR-0710KL
R3, R4	2	10 MΩ	1 % 0.1 W 0603	Yageo RC0603FR-0710ML
R5, R6	2	5.6 kΩ	1 % 0.1 W 0603	Yageo RC0603FR-075K6L
R7, R10, R11, R13	4	100 kΩ	1 % 0.1 W 0603	Yageo RC0603FR-07100KL
R8	1	10 MΩ *	DRL feedback, 1 % 0603	Yageo RC0603FR-0710ML
R12	1	1 MΩ	1 % 0.1 W 0603	Yageo RC0603FR-071ML
R9	1	390 kΩ	patient current limit, 0603	Yageo RC0603FR-07390KL
R14	1	4.7 kΩ	1 % 0.1 W 0603	Yageo RC0603FR-074K7L
R15	1	1.2 kΩ	1 % 0.1 W 0603	Yageo RC0603FR-071K2L
R18	1	100 Ω	1 % 0.1 W 0603	Yageo RC0603FR-07100RL
U1	1	INA333	zero-drift in-amp, VSSOP-8	TI INA333AIDGKR
U2	1	OPA4388	quad zero-drift RRIO op-amp, TSSOP-14	TI OPA4388IPWR
J1	1	SJ-3523-SMT	3.5 mm stereo jack, right angle, SMT	CUI Devices SJ-3523-SMT-TR
J2	1	1 × 3	male header 2.54 mm (optional)	generic, hand-solder
J3	1	1 × 4	male header 2.54 mm	generic, hand-solder
JP1	—	HI GAIN	solder jumper, 2 pads 1.3 mm pitch, open	on PCB

*** R8 VALUE**

R8 is the driven-right-leg feedback resistor. The specification and design note use 10 MΩ (RC0603FR-0710ML): simulated 50 Hz common mode improves from −46.8 dB (1 MΩ) to −55.3 dB. The factory BOM file in the Gerber package lists 1 MΩ; check this value before ordering a PCB assembly.

05 DESIGN FILES

Folder	Content
Schematic	EXG-Front_v1_schematic.pdf
Gerber	PiEEG Bio Amp Gerber set, BOM (exg-front_BOM_full.csv) and pick-and-place file
3D_Model	EasyEXG.step, EasyEXG.stl and an interactive HTML model
Arduino, SDK	USB sketch, Wi-Fi sketch and the Python viewer (EasyEXG Studio)

All files: github.com/pieeg-club/EasyEXG. Licence: CC BY-NC 4.0 (non-commercial use with attribution).